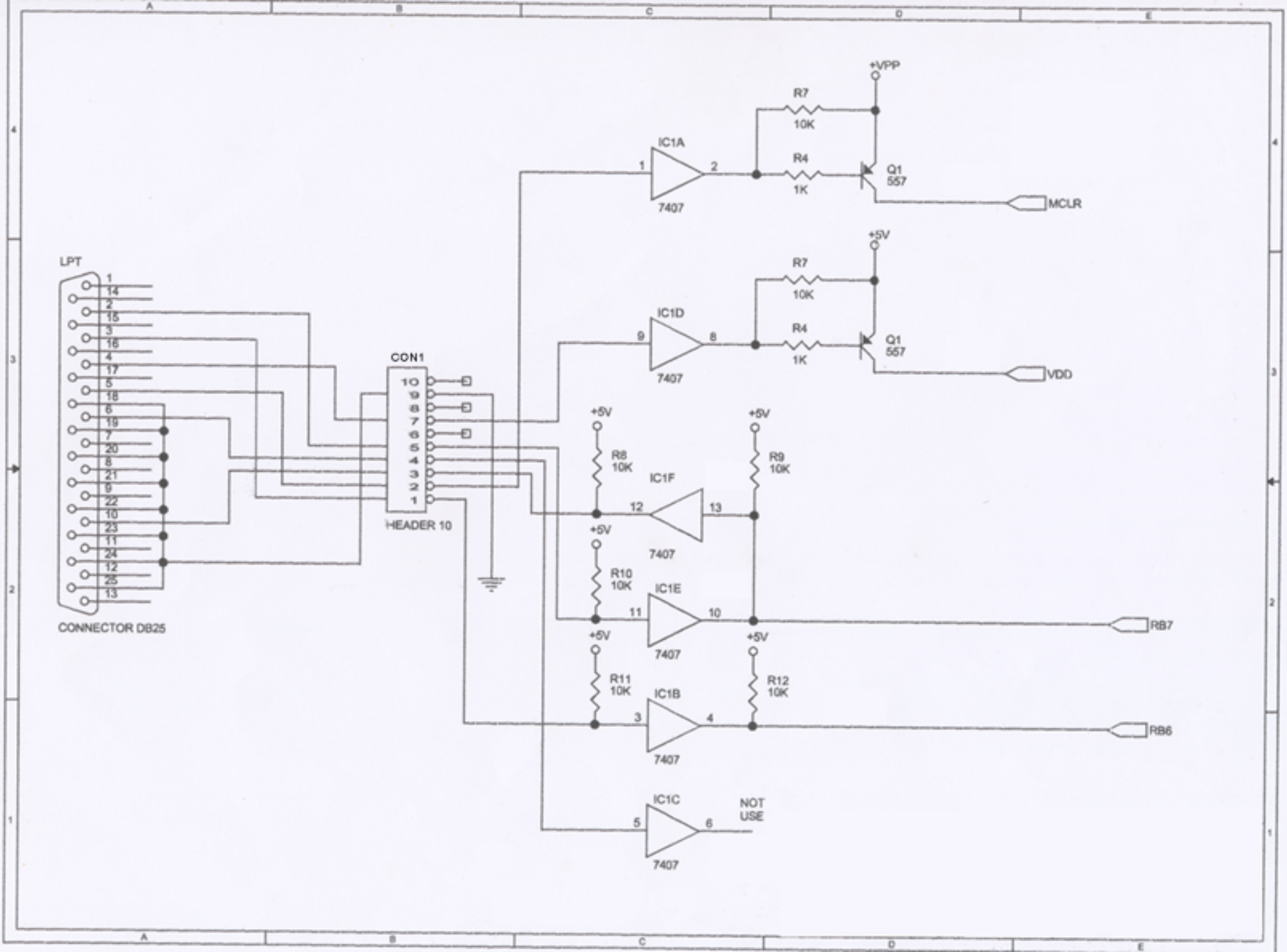
LPT
CONNECTOR DB25
CON1
HEADER 10
IC1A
7407
IC1D
7407
IC1F
7407
IC1E
7407
IC1B
7407
IC1C
7407
NOT USE
R7
10K
R4
1K
Q1
557
+VPP
+5V
R8
10K
R9
10K
R10
10K
R11
10K
R12
10K
MCLR
VDD
RB7
RB6